KRUGER

# VENTILATION FAN



**MODEL: KCE 200PA KCE 355PA KCE 400PD**
**KCE 280PA KCE 560PD**

## WARNING

**TO REDUCE THE RISK OF FIRE, ELECTRIC SHOCK, OR INJURY TO PERSONS, OBSERVE THE FOLLOWING:**

a). This appliance is not intended to be used by persons (including children) with reduced physical, sensory or mental capabilities, or lack of experience and knowledge, unless they have been given supervision or instruction concerning the use of the appliance by a person responsible for their safety. Children should be supervised not to play with the appliance.

b). Use this unit only in the manner intended by the manufacturer. If you have questions, contact the manufacturer.

c). Before servicing or cleaning unit, switch power off at service panel and lock the service disconnecting means to prevent power from being switched on accidentally. When the service disconnecting means cannot be locked, securely fasten a prominent warning device, such as a tag, to the service panel.

d). Installation work and electrical wiring must be done by a qualified person(s) in accordance with all applicable codes and standards, including fire-rated construction codes and standards.

e). This product is not equipped with a plug or any other means of disconnection from the power supply.

f). Sufficient air is needed for proper combustion and exhausting of gases through the flue (chimney) of fuel burning equipment to prevent backdrafting. Follow the heating equipment manufacturer's guideline and safety standards such as those published by the National Fire Protection Association (NFPA), and the American Society for Heating, Refrigeration and Air Conditioning Engineers (ASHRAE), and the local code authorities.

g). When cutting or drilling into wall or ceiling, do not damage electrical wiring and other hidden utilities.

h). Ducted fans must always be vented to the outdoors.

i). Acceptable for use over a tub or shower when connected to a GFCI (Ground Fault Circuit Interrupter) - protected branch circuit (ceiling installation only).

j). This unit must be grounded.

k). Not for Use in Kitchens.

l). To reduce risk of fire and to properly exhaust air, be sure to duct air outside - Do not vent exhaust air into spaces within walls or ceilings or into attics, crawl spaces, or garages.

m). WARNING: To Reduce The Risk Of Fire Or Electric Shock, Do Not Use This Fan With Any Solid-State Speed Control Device.

n). The fan must not be installed in a ceiling thermally insulated to a value greater than R40.

## CAUTION

1. For general ventilating use only. Do not use to exhaust hazardous or explosive materials and vapors.
2. This product is designed for installation in ceilings up to a 12/12 pitch (45 degree angle). Duct connector must point up. DO NOT MOUNT THIS PRODUCT IN A WALL.
3. The fan is to be installed above 2.3 m from the floor.
4. To avoid motor bearing damage and noisy and/or unbalanced impellers, keep drywall spray, construction dust, etc. off power unit.
5. Please read specification label on product for further information and requirements.

## READ AND SAVE THESE INSTRUCTIONS

Installer: Leave this manual with the homeowner.

## DIMENSION AND INSTALLATION DATA

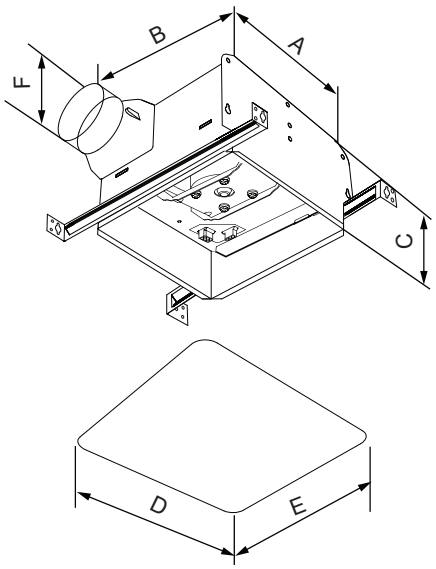


| MODEL | A | B | C | D | E | ØF | Weight(kg) |
|---|---|---|---|---|---|---|---|
| KCE 200PA | 267 | 289 | 194 | 330 | 350 | 148 | 4.5 |
| KCE 280PA | 267 | 289 | 194 | 330 | 350 | 148 | 4.5 |
| KCE 355PA | 267 | 289 | 194 | 330 | 350 | 148 | 4.5 |
| KCE 400PD | 267 | 289 | 194 | 330 | 350 | 148 | 4.5 |
| KCE 560PD | 267 | 289 | 194 | 330 | 350 | 148 | 4.5 |

All dimensions in mm.

## CLEANING & MAINTENANCE

For quiet and efficient operation, long life, and attractive appearance - lower or remove grille and vacuum interior of unit with the dusting brush attachment.The motor is permanently lubricated and never needs oiling. If the motor bearings are making excessive or unusual noises, replace the motor with the exact service motor. The impeller should also be replaced.

## OPERATION

Use an on/off switch to operate this fan. See “CONNECT ELECTRICAL WIRING” for details.

## PLAN THE INSTALLATION

1. Do not use in a cooking area.
2. Two ways to connect ductwork to a factory-shipped unit.
3. Enlarge the ceiling opening to 275 mm by 290 mm.

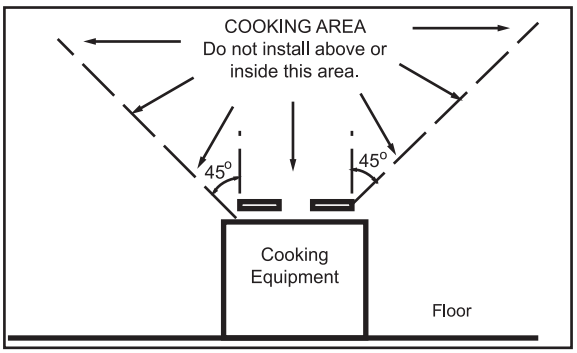


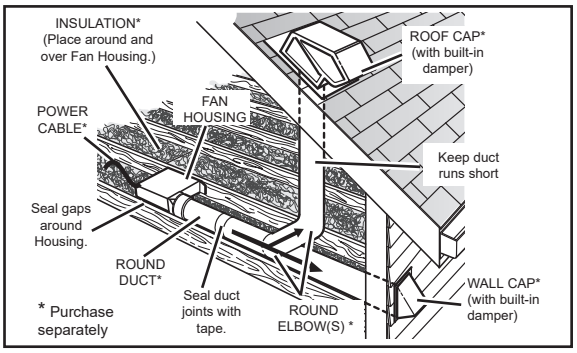

## ASSEMBLY INSTRUCTIONS

1. Sliding hanger bars have been provided, which allow the housing to be positioned accurately anywhere between the framing. The bars span up to 600 mm and can be used on all types of framing: I-joist, standard joist, and truss construction. Slide hanger bars onto housing and adjust as needed to fit between framing.

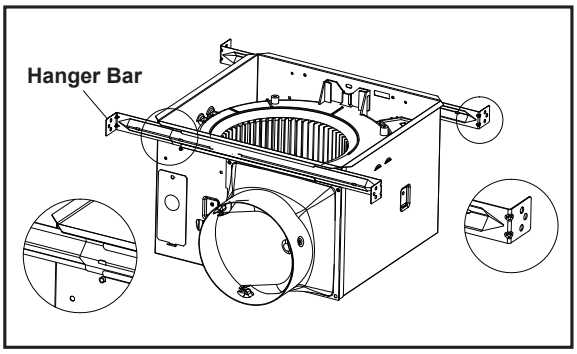


2. Extend the hanger bars to the width of the framing. Position the ventilator with the bottom edge of the hanger bar tabs are flush with the bottom edge of the framing, holding the ventilator in place. Secure hanger bars to framing using one screw on each end of hanger bar. Select a proper hole and secure the hanger bars together using one screw.

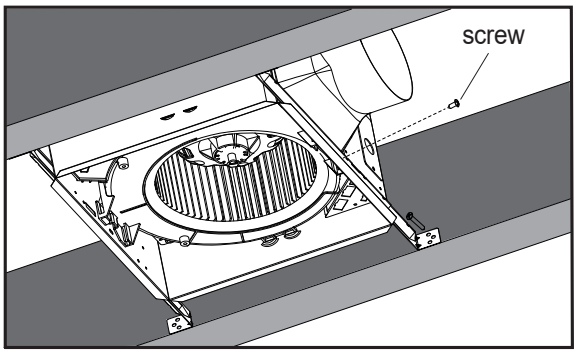


3. INSTALL ROUND DUCTWORK
Connect the round ductwork (not included) to the damper / duct connector, and run the ductwork to a roof or wall cap (not included). Using tape (not included), secure all the ductwork connections so that they are air tight.

The ducting from this fan to the outside of building has a strong effect on the air flow, noise and energy use of the fan. Use the shortest, straightest duct routing possible for best performance, and avoid installing the fan with smaller ducts than recommended. Insulation around the ducts can reduce energy loss and inhibit mold growth. Fans installed with existing ducts may not achieve their rated air flow.

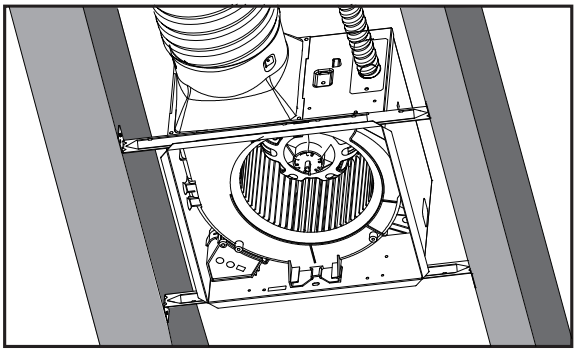

## CONNECT ELECTRICAL WIRING

Run 220-240V AC house wiring to the location of the fan. Use only UL- approved connectors (not included) to attach the house wiring to the wiring plate. Refer to the wiring diagram, and connect the wires as shown.

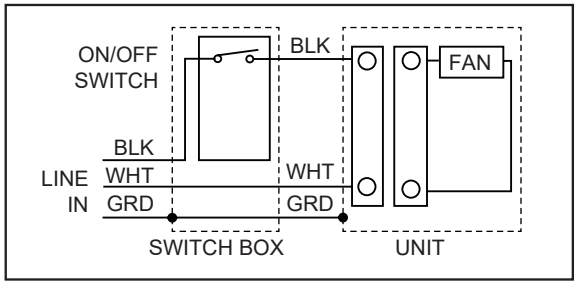


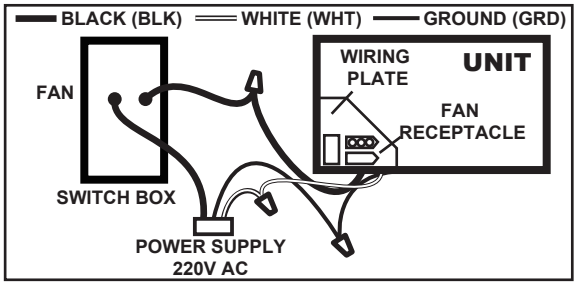

## INSTALL GRILLE

Install ceiling material to complete the ceiling construction.
To attach the grille assembly to the fan housing. Pinch the grille springs on the sides of the grille assembly, and position the grille into the housing with the grille springs in the appropriate slots. Push the grille assembly towards the ceiling to secure.

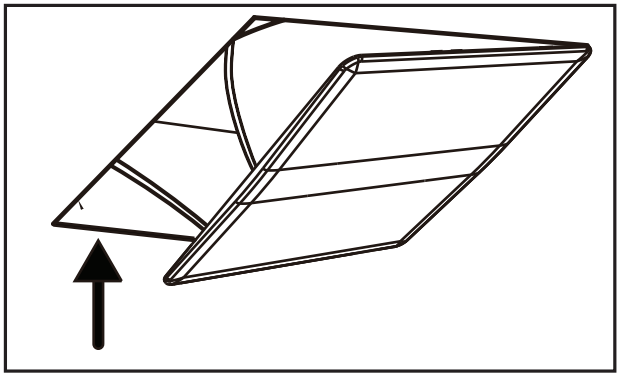

## SERVICE PARTS

| PART | PART NAME | Qty. |
|---|---|---|
| 1 | Grille Assembly (includes part 2) | 1 |
| 2 | Grille Spring | 2 |
| 3 | Power box (for KCE 400PD and KCE 560PD) | 1 |
| 4 | Blower | 1 |
| 5 | Blower Wheel | 1 |
| 6 | Motor Plate | 1 |
| 7 | Motor | 1 |
| 8 | Hanger Bar Kit | 4 |
| 9 | Wire Panel / Harness Assemblye | 1 |
| 10 | Housing | 1 |
| 11 | Damper / Duct Connector | 1 |
| 12 | Wiring plate | 1 |
| | | |
| a | Screw | 3 |
| b | Screw | 5 |
| c | Screw | 3 |
| d | Screw | 6 |

* Blower Assembly includes part 4, 5, 6, 7, b, c

**WARNING:** Ensure that the fan is switched off from the supply mains before replacing.

